1. THE IDENTIFICATION MARKINGS ON THE PALLETIZED UNIT LOADS SHALL INCLUDE THE FOLLOWING (SEE PARAGRAPHS 2, 3, AND 4):

   A. NSN
   B. DODIC/NALC
   C. LOT NUMBER
   D. QUANTITY
      (1) BY LOT (IF MORE THAN ONE LOT)
      (2) TOTAL QUANTITY (IF ONE LOT)
   E. ITEM DESCRIPTION
   F. GROSS WEIGHT
   G. PROPER SHIPPING NAME (PSN) AND IDENTIFICATION NUMBER
   H. PERFORMANCE ORIENTED PACKAGING (POP) CERTIFICATION NUMBER

2. UNIT LOADS OF AMMUNITION REQUIRE THE ADDITION OF IDENTIFICATION MARKING APPLIED TO TWO ADJACENT SIDES OF THE LOAD (SEE FIGURE 1).

   (A) THE IDENTIFICATION MARKING THAT IS NOT VISIBLE ON THE BOXES SHALL BE ADDED TO THE UNIT LOAD. THIS ADDITIONAL MARKING IS NORMALLY LIMITED TO QUANTITY AND PARTIAL NOMENCLATURE SUCH AS 100 GRENADES OR 30 CARTRIDGES. GROSS WEIGHT OF THE UNIT LOAD, APPLICABLE MIXED LOT IDENTIFICATION, AND ANY LIGHT BOX/EMPTY BOX DATA (QUANTITY PER BOX OR NUMBER OF EMPTY BOXES).

   (B) UNLESS OTHERWISE SPECIFIED, UNIT LOADS MAY HAVE ONE OR MORE BOXES TURNED TO PRESENT A BLANK SURFACE FOR MARKING. MARKING SHALL BE APPLIED BY STENCILING, STAMPING, MACHINE PRINTING, SILK-SCREENING OR EMBOSSING. MARKINGS SHALL BE THE LARGEST PRACTICAL SIZE. WATERPROOF MARKING BOARDS MAY BE USED WHEN IT IS IMPOSSIBLE TO OBTAIN A BLANK SURFACE FOR MARKING. APPROVAL MUST BE OBTAINED BY THE PROCURING COMMAND PRIOR TO USING MARKING BOARDS.

   (C) BOXES WHICH MUST HAVE ALL NOSE ENDS POINTED IN THE SAME DIRECTION SUCH AS SOME ROCKETS AND WHITE PHOSPHORUS (WP) ROUNDS SHALL NOT BE TURNED.

   (D) WHEN THE UNIT LOAD IS CONFIGURED IN SUCH A WAY THAT THE BOX TOPS ARE TURNED INWARD ON THE LOAD, THE TOP LAYER SHALL BE TURNED TOP OUT TO PERMIT THE PSN AND IDENTIFICATION NUMBER TO BE VISIBLE. WHEN IT IS NOT PRACTICAL TO TURN THE ENTIRE TOP LAYER, TWO DIAGONAL CORNER BOXES ON THE TOP LAYER SHALL BE TURNED TO EXPOSE THE PSN AND THE IDENTIFICATION NUMBER.

   (E) POP CERTIFICATION MARKINGS SHALL ALSO BE EXPOSED ON AT LEAST ONE PLACE ON THE UNIT LOAD.

3. UNIT LOADS OF UNPACKAGED AMMUNITION.

   (A) UNIT LOADS OF OTHERWISE UNPACKAGED AMMUNITION SUCH AS SEPARATE LOADING PROJECTILES REQUIRE ADDITION OF ONLY THOSE IDENTIFICATION MARKINGS THAT ARE NOT VISIBLE ON THE PROJECTILES. ANY ADDITIONAL MARKINGS ARE NORMALLY LIMITED TO QUANTITY, NOMENCLATURE, GROSS WEIGHT, AND MIXED LOT IDENTIFICATION, INCLUDING QUANTITY PER LOT.

   (B) MARKING MAY BE APPLIED DIRECTLY TO THE PALLET USING METHODS SPECIFIED IN NOTE 28. WATERPROOF PAPER, METAL, CLOTH OR PLASTIC SHIPPING TAGS MAY BE USED WHEN THE MARKINGS CANNOT BE APPLIED DIRECTLY TO THE PALLET LOAD. TAGS SHOULD BE ATTACHED TO THE UNIT LOAD BY CORROSION-RESISTANT WIRE OR PLASTIC TIES. IN ADDITION TO USING WIRE OR PLASTIC TIES, TAGS MAY ALSO BE ATTACHED BY STAPLES.

   (C) THE LOCATION AND CONTENT OF IDENTIFICATION MARKINGS SHALL BE SPECIFIED ON THE AMMUNITION PACKING AND MARKING DRAWINGS FOR SEPARATE LOADING PROJECTILES.

4. UNIT LOADS OF CYLINDRICAL CONTAINERS.

   (A) UNIT LOADS OF CYLINDRICAL CONTAINERS (SUCH AS PROPELLING CHARGES, COMPLETE ROUNDS, ETC.) SHALL HAVE ADDITIONAL UNIT LOAD IDENTIFICATION MARKINGS APPLIED DIAGONALLY AT OPPOSITE ENDS OF THE UPPER LAYER OF THE LOAD BY WATERPROOF TAG, LABEL, STENCILING OR STAMPING IN A CONTRASTING COLOR (SEE NOTES 28 AND 38).

   (B) UNIT LOAD IDENTIFICATION MARKINGS SHALL INCLUDE GROSS WEIGHT, QUANTITY, MIXED LOT AND EMPTY/LIGHT CONTAINER INFORMATION.

   (C) CONTAINERS SHALL BE POSITIONED SO THAT THE PROPER SHIPPING NAME AND UN SERIAL NUMBER ARE VISIBLE ON AT LEAST ONE CONTAINER ON ONE SIDE OF THE UNIT LOAD. THE ORIENTATION OF THE CONTAINERS SPECIFIED IN THE UNITIZATION DRAWINGS SHALL BE FOLLOWED.

5. UNIT LOADS COMPRISED OF MULTIPLE LOTS.

   (A) UNIT LOADS OF AMMUNITION AND EXPLOSIVES COMPRISED OF MORE THAN ONE LOT SHALL BE MARKED WITH THE APPROPRIATE LOT NUMBERS. IN ADDITION, THE LOT NUMBER AND QUANTITY OF EACH LOT IN UNIT LOADS OF MIXED LOTS SHALL BE LISTED ON A PLAIN WHITE LABEL OR TAG, AS APPLICABLE, AND SHALL BE PLACED ADJACENT TO OTHER IDENTIFICATION MARKINGS.

   (B) THE MAXIMUM SIZE OF THE LABEL OR TAG SHALL BE 4 BY 6 INCHES, AND THE LETTERING SHALL BE NOT LESS THAN A QUARTER OF AN INCH IN HEIGHT.

6. FULL CARLOAD OR FULL TRUCKLOAD SHIPMENTS.

   (A) PACKAGES OF MILITARY AMMUNITION AND EXPLOSIVES SHIPPED BY OR ON BEHALF OF DOD IN FREIGHT CONTAINER LOADS, CAR LOADS OR TRUCK LOADS (INCLUDING EXCLUSIVE USE) AND LOADED AND UNLOADED BY THE SHIPPER OR BY DOD ARE EXEMPT FROM HAZARD WARNING LABELING REQUIREMENTS. ALSO, UNITIZED OR PALLETIZED BREAKBULK SHIPMENTS BY CARGO SHIP UNDER CHARTER TO DOD MAY BE SHIPPED WITH A SINGLE HAZARD WARNING LABEL PER UNIT LOAD. HOWEVER, WHEN THE LOGISTICS FLOW OF MATERIAL IS UNKNOWN, GENERAL HAZARDOUS MATERIALS LABELING REQUIREMENTS SHALL BE MET.

   (B) ALL OCONUS SHIPMENTS (EXCEPT THOSE IN INTERMODAL CONTAINERS) REQUIRE THAT AT LEAST ONE HAZARD WARNING LABEL BE AFFIXED TO EACH UNIT LOAD OF PALLETIZED CARGO OR TO EACH EXTERIOR PACKAGE OF LOOSE CARGO IN ACCORDANCE WITH CFR TITLE 49 AND THE APPLICABLE INTERNATIONAL MODAL DOCUMENT REQUIREMENTS. THE MARKING AND LABELING REQUIREMENTS IMPOSED BY FOREIGN GOVERNMENTS SHALL BE OBSERVED AS PRESCRIBED BY THE SERVICE DIRECTING THE SHIPMENT. SHIPMENTS TO THE UNITED KINGDOM MUST HAVE LABELS OR LABELED TAGS APPLIED TO ALL FOUR EXTERIOR SIDES OF THE UNIT LOAD. LABELS SHALL NOT BE APPLIED DIRECTLY TO THE END ITEM.

7. BAR CODING UNIT LOADS (SEE FIGURE 2).

   (A) BAR CODE SYMBOLOGY SHALL COMPLY WITH AIM BC 1. THE DATA ELEMENTS TO BE ENCODED ARE THE NATIONAL ITEM IDENTIFICATION NUMBER (NIIN), THE LOT NUMBER AND QUANTITY. THE NIIN SHALL BE ENCODED WITHOUT DASHES. THE LOT NUMBER SHALL BE ENCODED WITH DASHES. ADDITIONAL DATA ELEMENTS MAY ALSO BE REQUIRED BY THE PROCURING ACTIVITY. UNLESS OTHERWISE SPECIFIED, LABELS SHALL BE APPLIED ON THE FAR RIGHT VERTICAL STRAPS ON THE SHORT DIMENSION OF THE UNIT LOAD. LABELS SHALL BE APPLIED TO BOTH SIDES OF THE UNIT LOAD STARTING 18 INCHES ABOVE THE PALLET DECK. IF THE TOP OF THE LOAD IS LESS THAN 18 INCHES, APPLY LABELS FROM THE TOP OF THE VERTICAL STRAP. WHEN THERE ARE NO VERTICAL STRAPS ALONG THE SHORT DIMENSION, THE LABELS SHALL THEN BE APPLIED TO VERTICAL STRAPS ALONG THE LONG DIRECTION.

   (B) MORE THAN ONE LOT. MULTIPLE LOT LABELS SHALL BE PLACED IN SEQUENCE. IF THERE IS NOT SUFFICIENT SPACE ON THE STRAPPING ON THE SHORT DIMENSION, LABELS SHALL BE PLACED ON A LOCALLY FABRICATED, MOISTURE-PROOF DISPLAY BOARD, PREFERABLY ALUMINUM, AND SHALL BE ATTACHED TO THE UNIT LOAD.

8. LIGHT LOAD MARKINGS. WHEN THE BOTTOM SURFACE OF A LIGHT OR EMPTY BOX IS VISIBLE (I.E. THE ORANGE COLOR IS NOT VISIBLE IN THE UNIT LOAD) THE BOTTOM MUST BE PAINTED OR MARKED IN ORANGE SIMILAR TO COLOR CHIP 32246 OF FED-STD-595. THE WORDS "LIGHT BOX" OR "EMPTY", AS APPLICABLE, SHALL BE MARKED IN A CONTRASTING COLOR ON THE BOX BOTTOM.

   (A) UNIT LOADS CONTAINING EMPTY OR LIGHT BOXES SHALL BE IDENTIFIED BY QUANTITY PER BOX AND/OR NUMBER OF EMPTY BOXES. THIS INFORMATION SHALL BE SHOWN NEAR THE OTHER PALLET IDENTIFICATION MARKINGS.

   (B) LESS THAN FULL UNIT LOADS OF UNPACKAGED AMMUNITION SUCH AS SEPARATE LOADING PROJECTILES SHALL BE IDENTIFIED BY AN ORANGE TAG, SIMILAR TO COLOR CHIP 32246 OF FED-STD-595, PLACED ON TWO DIAGONAL CORNERS OF THE LOAD, WITH THE TAG MARKED AS "LIGHT LOAD". SUCH LOADS MUST BE CONSTRUCTED SO THAT THE LONGITUDINAL CENTER OF GRAVITY IS THE SAME AS FOR A FULL LOAD.

9. ALL NON-MANUFACTURED WOOD USED IN THE PALLETIZED LOAD SHALL BE HEAT TREATED TO A CORE TEMPERATURE OF 56 DEGREES CELSIUS FOR A MINIMUM OF 30 MINUTES. THE PALLET MANUFACTURER AND THE MANUFACTURER OF WOOD USED TO BUILD FILLER ASSEMBLIES AND SPACER/SUPPORT GATE ASSEMBLIES FOR THE PALLETIZED LOAD SHALL BE AFFILIATED WITH AN INSPECTION AGENCY ACCREDITED BY THE U.S. DEPARTMENT OF AGRICULTURE. THE PALLET MANUFACTURER AND THE MANUFACTURER OF WOOD USED TO BUILD FILLER ASSEMBLIES AND SPACER/SUPPORT GATE ASSEMBLIES FOR THE PALLETIZED LOAD SHALL ENSURE TRACEABILITY TO THE ORIGINAL SOURCE OF HEAT TREATMENT. EACH PALLET, FILLER ASSEMBLY, AND SPACER/SUPPORT GATE ASSEMBLY SHALL BE MARKED TO SHOW THE CONFORMANCE TO THE INTERNATIONAL PLANT PROTECTION CONVENTION STANDARD. PALLETS, FILLER ASSEMBLIES AND SPACER/SUPPORT ASSEMBLIES MADE OF NON-MANUFACTURED WOOD SHALL BE HEAT TREATED AND MARKED APPROPRIATELY. THE QUALITY MARK FOR THE PALLET SHALL BE PLACED ON TWO OPPOSITE END POSTS ON THE SAME SIDE AS THE PRESERVATIVE MARKING. THE QUALITY MARK FOR THE FILLER ASSEMBLIES AND SPACER/SUPPORT ASSEMBLIES SHALL BE PLACED ON TWO OPPOSITE SIDES.

REVISION			
LTR	DESCRIPTION	DATE	APPROVED
-	PRODUCT BASELINE ERR R7S2021 97-06-05	97-06-23	Schulty
A	NOR R1K3002 010816	010925	RLV

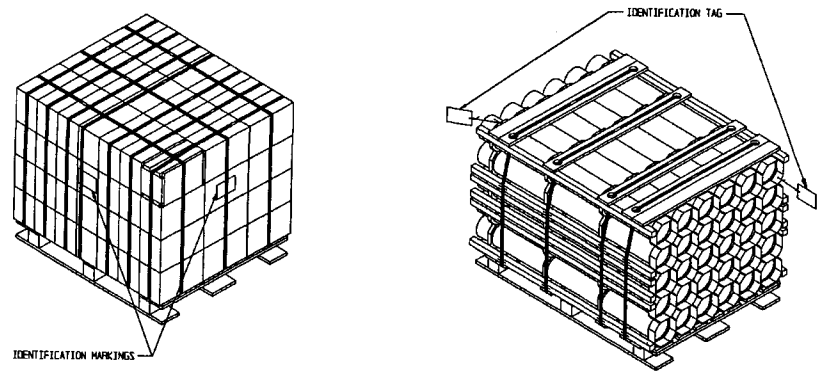

FIGURE 1

NOTE: A DUPLICATE SET OF LABELS MUST ALSO BE APPLIED ON THE OPPOSITE SIDE.

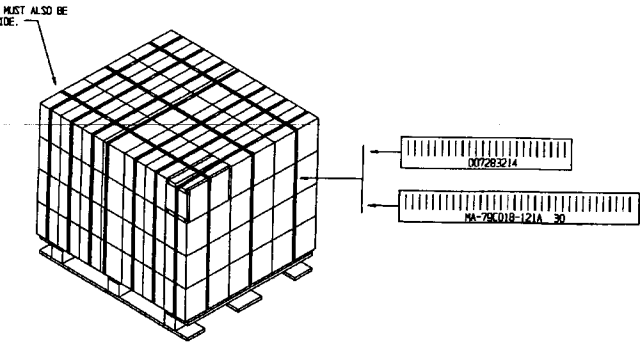

FIGURE 2

PART NO ACV00561

DISTRIBUTION STATEMENT A.

APPROVED FOR PUBLIC RELEASE;
DISTRIBUTION IS UNLIMITED.

NEXT ASSY	USED ON
APPLICATION	

UNLESS OTHERWISE NOTED DIMENSIONS ARE IN INCHES. BREAK SHARP CORNERS AND EDGES.
TOLERANCES ON
FRACTIONS
DECIMALS
MATERIAL

DATE 97-06-05
DRFTSMN BJK | CHECKER SMS | PROJ MGR SCHULTZ
SUBMITTED: CHIEF, SUPPLY ENGINEERING DIV
CHIEF, LOGISTICS ENGINEERING OFFICE
APPROVED BY ORDER OF COMMANDER: U.S. ARMY INDUSTRIAL COMMAND
U.S. ARMY DEFENSE AMMUNITION CENTER

DESIGN ACTIVITY
U.S. ARMY
INDUSTRIAL OPERATIONS COMMAND
DEFENSE AMMUNITION CENTER
SAVANNA, ILLINOIS 61074-9639

UNIT LOAD MARKING FOR SHIPMENT AND STORAGE, AMMUNITION AND EXPLOSIVES

SIZE	CAGE CODE	
D	28620	ACV00561
SCALE NONE	UNIT WT	SHEET 1 OF 1